ENGLISH

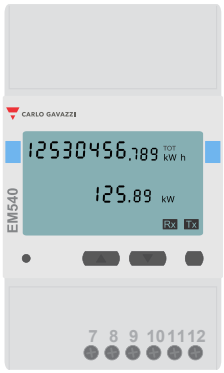

Energy Meter Manual

EM540

rev 07 - 09/2024

This manual is also available in HTML5.

Table of Contents

1. Introduction 1
1.1. Features 1

2. Installation and configuration 2
2.1. AC wiring 2
2.1.1. Configuration options 2
2.1.2. System examples 2
2.2. Connection to a GX device 5
2.2.1. Wired connection to a GX device 5
2.2.2. Zigbee connection to a GX device 6
2.3. GX device configuration 7
2.4. Multiple Energy Meters in one system 9
2.4.1. Changing the modbus address 10

3. Information on multiple Zigbee pairs 11
3.1. Multiple Zigbee pairs 11

4. FAQ 12

1. Introduction

The Victron EM540 is a standard device to measure the power and energy of a 3-phase application.

Its data will be displayed on a GX device and our VRM portal.

1.1. Features

The EM540 can be configured for four different roles in a GX device such as the Cerbo GX:

1. As a Grid meter and used as control input for an ESS System.
2. To measure the output of a PV Inverter.
3. To measure the output of a AC Genset.
4. As an AC meter to measure a dedicated AC load circuit.

It offers two options for connection to a GX device:

1. A wired connection, either by using the RS485 to USB interface with 1.8m or 5m cable length.
2. A wireless connection via our Zigbee to USB and Zigbee to RS485 converter.

2. Installation and configuration

2.1. AC wiring

2.1.1. Configuration options

The configuration option of either Grid Meter, PV Inverter, Generator or AC Meter is set in the GX device. For details on GX device configuration see the GX device configuration [7] chapter. This selection will affect how the system should be wired and how the information received from the meter is displayed on the screen.

See the below diagrams for the different wiring options. Note that wherever the word "Fuse" appears in the diagrams, a 315 mA fuse should be used, if required by local law.

2.1.2. System examples

Example diagrams

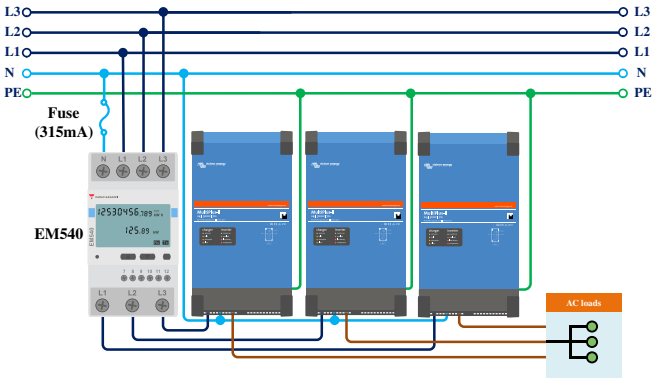

EM540 wired as a 3-phase Grid meter

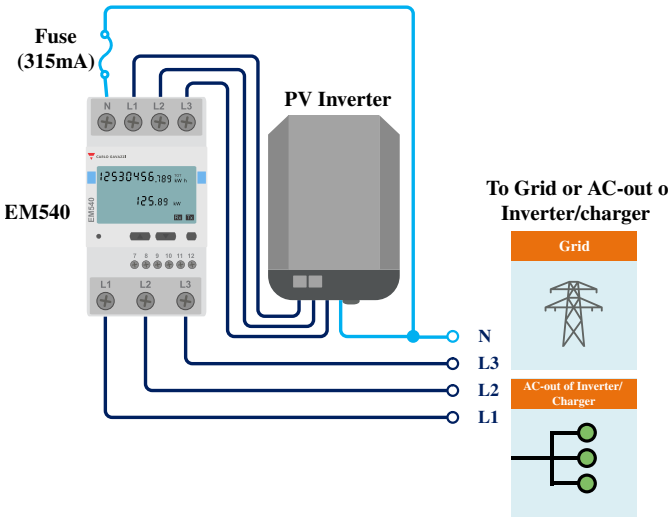

EM540 wired to measure a 3-phase PV Inverter - note that terminals 1, 2 and 3 face the PV inverter

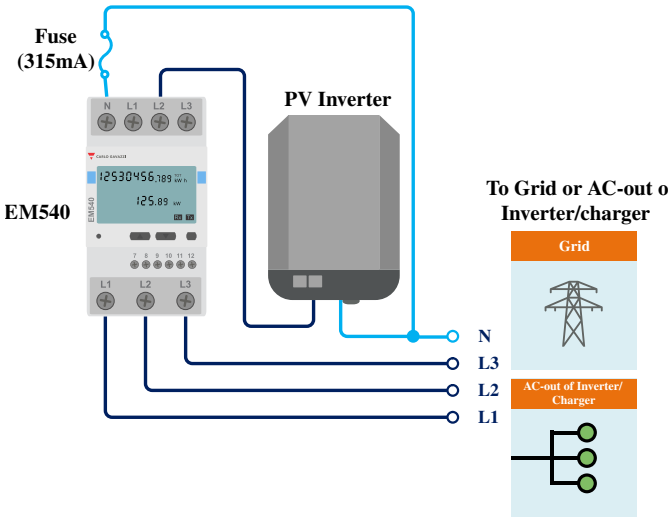

EM540 wired as a single-phase, single-function PV inverter meter to measure a 1-phase PV inverter in a 3-phase system - note that the PV inverter can connect to any of the 3 phases

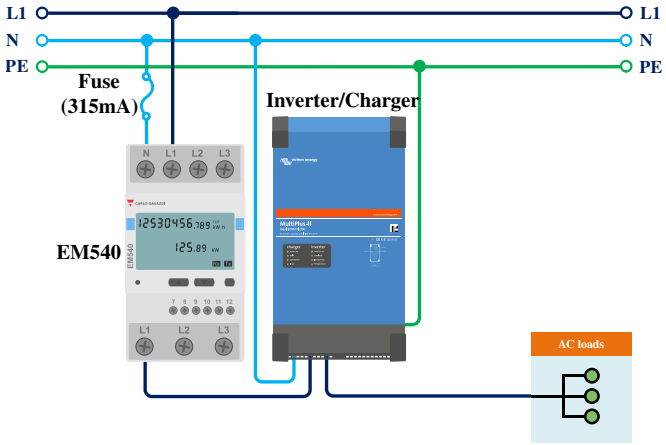

EM540 wired as a single-phase, single function Grid meter

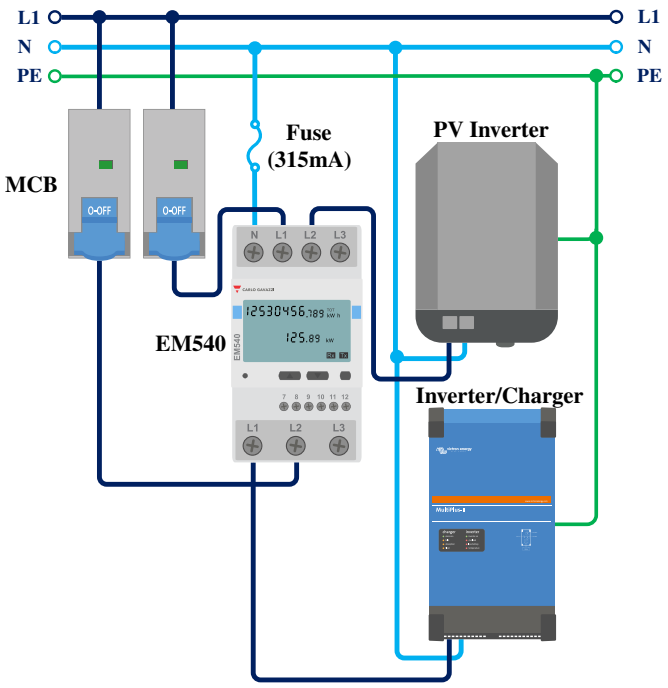

EM540 wired as a single-phase, dual function Grid meter also metering a PV Inverter on L2

When used to measure a PV Inverter, terminals 1, 2 and 3 should face the PV inverter to ensure correct direction of current and power.

Single-phase, single function

- To measure a single-phase PV inverter in a 3-phase system, connect all 3 phases to the grid phasing terminals (4, 5 and 6). Now connect the PV Inverter by wiring the L1 line of the PV inverter to the desired phase (L1, L2 or L3 - terminal 1, 2 or 3).
- To measure the grid in a single-phase system, ensure the grid is connected to L1 (terminal 1) of the EM540.

Single-phase, dual function

If you want to use a three-phase meter in a single-phase installation to measure the grid on one input of the meter and the output of the PV inverter on another input of the energy meter, make sure that the energy meter uses L1 and the PV inverter uses L2. See the GX device configuration [7] chapter for more details on how to set it up in a GX device

2.2. Connection to a GX device

2.2.1. Wired connection to a GX device

Connect the EM540 to the GX device using the RS485 to USB interface.

The EM540 is plug and play and its RS485 settings are already configured to the correct parameters for connection to a GX device via the RS485 to USB interface.

The RS485 to USB interface cable between the GX device and the Energy Meter can be extended up to 100 meters; make sure that the extensions of the Data+ (orange) and Data- (yellow) wires form a twisted pair.

The table below shows the colors of the wires and their connection to the terminals of the EM540, as well as the colors to be used for a CAT5 extension cable.

RS485 to USB	RS485 Signal	EM540 terminal number	Suggested wire color CAT5 extension cable
Orange	Data +	8	Orange
Yellow	Data -	9	Orange/White
Black	GND	10	Brown

The red, green and brown wire coming out of the RS485 to USB cable are not used. Cut them off or bend them back and isolate them.

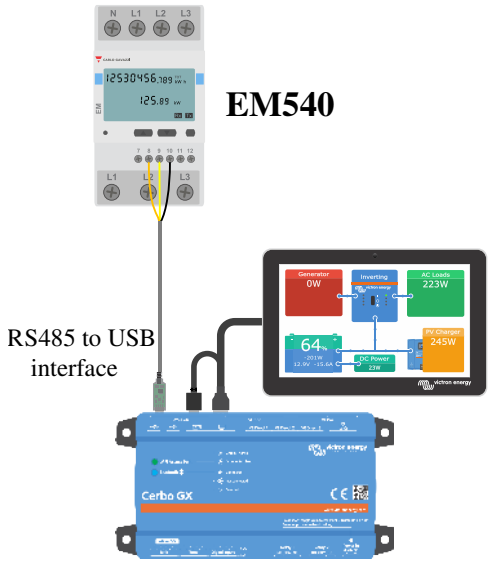

EM540 wired connection to a Cerbo GX using the RS485 to USB interface

To ensure signal integrity and robust operation, particularly ensure that:

- The extension cabling complies with the minimum cross-sectional area specifications in the RS485 to USB interface data sheet.
- The extension cabling has appropriate shielding and twisted pair cores.
- The original cable attached to the Victron RS485 USB interface is reduced to a maximum length of 20cm for installations where the total cable length exceeds 10m or where installation/site specific interference occurs - in this case, a suitable/quality cable should be used for the entire cable length and not only for the extension length.
- Cabling is installed separated/away from the main DC or AC power cabling.
- All wiring is properly terminated (including unused wires) and properly isolated from weather/water ingress.
- RS485 networks are traditionally terminated at both ends with 120Ω terminators. This is not required if the cable length is short and you are using the Victron supplied RS485 to USB lengths, but may be required if the cable length is modified.
- For detailed wiring/installation notes and specifications refer to the Victron RS485 to USB interface cable 'Datasheet'.

2.2.2. Zigbee connection to a GX device

The EM540 can also be wirelessly connected to a GX device via our Zigbee to USB converter & Zigbee to RS485.

The Zigbee to USB converter is connected to the GX device and the Zigbee to RS485 converter is connected to the EM540.

1. Connect the Zigbee to USB converter to the GX device using the supplied USB cable.

   A few seconds after connecting, the active LED should be on and the TX/RX LED should be blinking (the converter takes its power from the GX device, so the GX device needs to be switched on as well).

2. Connect the Zigbee to RS485 converter to the EM540 energy meter according to the table below:

Zigbee to RS485	EM540 terminal number	Color
GND	10	Black
A	8	Orange
B	9	Yellow

   In case you have several Zigbee devices installed, make sure only one Zigbee device is powered up right now: the Zigbee to USB converter connected to the GX device. Power down all others. If you don't do this, the Zigbee to RS485 converter may be connected permanently to another Zigbee device.

3. Connect the 12V DC power supply to the Zigbee to RS485 converter. When the power is switched on, check the LEDs again.

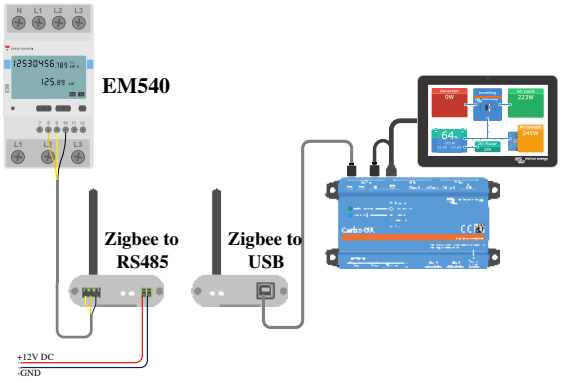

Energy Meter wireless Zigbee connection to a Cerbo GX

Note on old and new Zigbee converters

Please note that there is a new Zigbee converter available now, that is **not** backwards compatible with the old converters. See table below for old versus new part numbers. If you have a non compatible set, please ask your supplier for a correct version.

old/new	Victron part number	Zigbee to RS485 converter part number
old	ASS300400100	DRF2619C
old	ASS300400100	DRF2618A
new	ASS300420100	DRF2659C
new	ASS300420200	DRF2658C

Note on GX firmware versions

For the new type Zigbee converters, Venus OS v2.54 is the minimum required software version.

2.3. GX device configuration

After proper connection and powering up, the meter(s) will be visible on the GX device in the Settings → Energy meters menu:

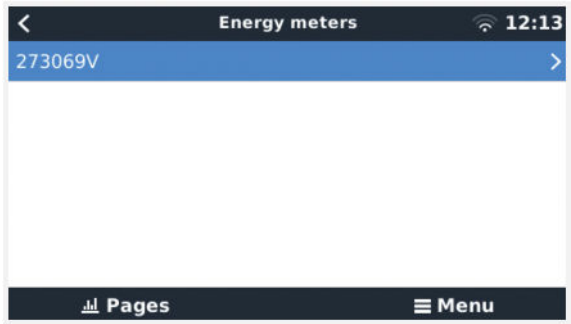

Single Energy Meter in the Energy meters menu

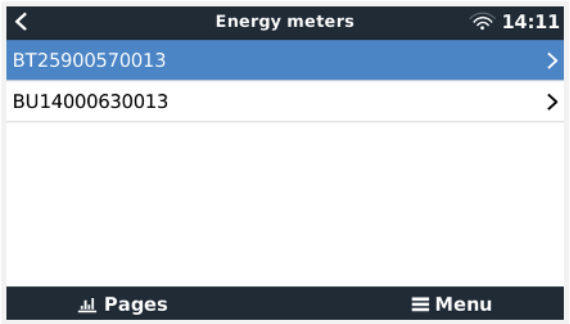

Two Energy Meters in the Energy meters menu

After selecting an Energy Meter, you have to set the Role and Phase type. Press the space bar or right click to get to the Phase type and Role menu:

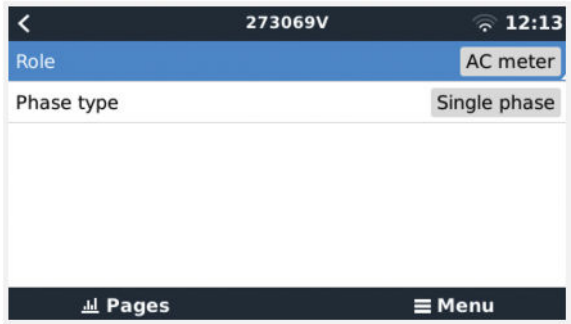

For the ET112 only Single phase option is displayed

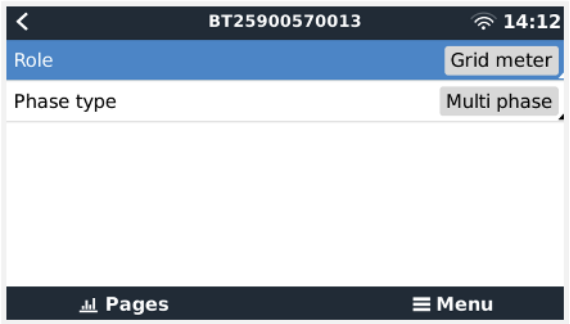

Depending on the application, the role is set here

Select either Role or Phase type and press the space bar to make changes:



Select the Role according to the application

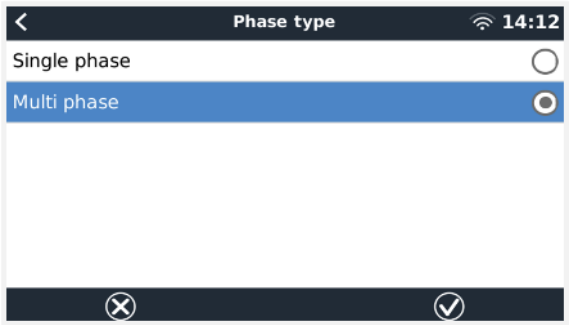

Selection menu for Single and Multi phase type

Single-phase, single function and single-phase, dual function mode setup:

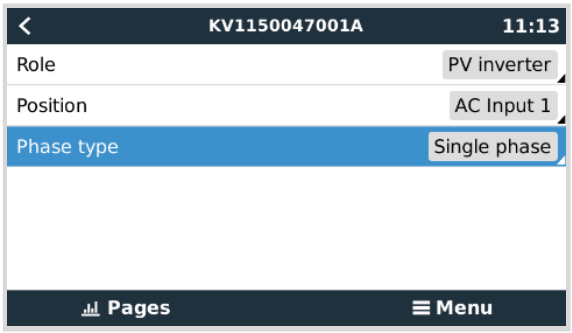

Single-phase, single function



Single-phase, dual function to measure grid on L1 and a PV Inverter on L2. Note that this only applies to the EM540 and ET340.

After all settings have been made, the Energy Meter now appears with the relevant data in the device list of the GX device:

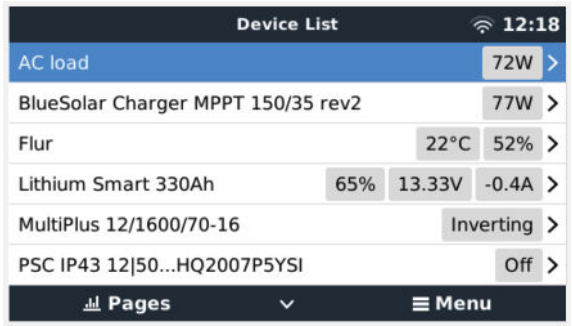

Energy meter set to measure AC loads on the AC output of the inverter/charger

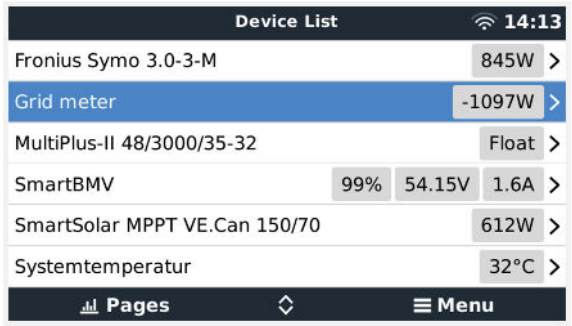

Or configured to measure energy consumption from the grid

Right-click or press the spacebar to get to the Energy Meter overview with all relevant data on energy consumption and its generation in all phases. At the bottom of the menu, the role of the Energy Meter can be set via the Setup menu. The data used for communication can be read out via the Device menu. You can also set up a custom name for the Energy Meter there:

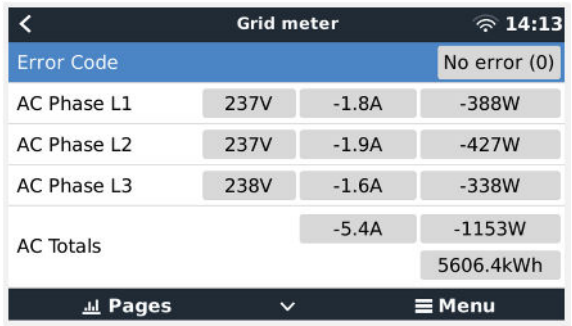

Detailed overview page of a 3-phase Grid meter

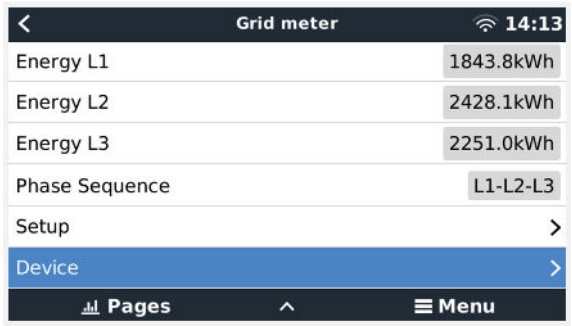

Always be informed about all details, to the second



Custom name configuration

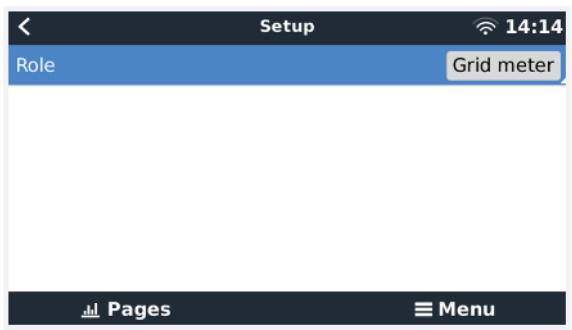

Quickly change roles

2.4. Multiple Energy Meters in one system

To connect multiple Energy Meters, wire each meter to a separate RS485 to USB interface, which are then each plugged into a separate USB socket on the GX device.

There are 3 options to connect multiple Energy Meters:

- Each wired to a separate RS485 to USB interface, which are then each plugged into a separate USB socket on the GX device.
- Two Energy Meters wired on to one RS485 to USB interface. In this case the modbus address of the additional meter needs to be changed, so each is unique. See next chapter Changing the modbus address [10].
- Wireless connection: the additional meter is connected to an additional Zigbee to RS485 converter. There is then no second Zigbee to USB converter required. It is then necessary to change the modbus address of one of the AC sensors. See chapter Changing the modbus address [10].

Besides adding an additional sensor, in a single-phase installation it is also possible to use the unused second phase to measure the power of the PV inverter. See the AC Wiring chapter [2] in this manual.

2.4.1. Changing the modbus address

1. Press the small button once on the EM540 to enter the 'Setting' page.
2. Briefly press the small key again to enter the 'System' menu.
3. Press the down key as many times as necessary to get to the 'RS485' menu.
4. In the 'RS485' menu, press the small button once to enter the 'Address' menu.
5. Use the up or down button to change the address to 2 for the additional EM540.
6. Press the small button as many times as necessary until the display shows 'RS485' again.
7. Scroll through the menus using the down button until it shows 'End'.
8. Press the small button once to get back to the 'Setting' page.
9. Press the left button once. It should now display 'back'.
10. Press the small button once to return to the overview page.



Only one extra Energy Meter can be added: the system works only with address 1 (the default) and 2.

3. Information on multiple Zigbee pairs

3.1. Multiple Zigbee pairs

Running multiple Zigbee pairs is rather unusual and not recommended due to its complexity in configuration via the Chinese language configuration software. However, for those who still want to try, we show a possible solution.

The following is only valid for the new Zigbee converters with part number DRF2658 and DRF2659. For older units there is no software support anymore.

To run multiple pairs, the PAN-Id needs to be different, otherwise they interfere with one another. Basic information about where to obtain the software and how to reconfigure this:

1. Go to http://www.dtkcn.com/
2. Use the translation feature of your browser if you don't read Chinese, then download the "DTK wireless module configuration software".
3. The installation is in Chinese, but can be installed by clicking the equivalent "Next" button repeatedly. The software itself has an English translation.
4. You need to wire an RS485 to USB interface to the RS485 Zigbee module if you need to reconfigure it. The alternative is to reconfigure the USB unit (the coordinator) BEFORE you turn on the RS485 side (the router). The router will always join the coordinator and get its initial settings at startup.
5. Each pair must have a different PAN-Id.



It is unusual to have multiple Zigbee links. Using an Energy meter via Ethernet (possibly with a Wi-Fi link) is the more reliable option in any case.

4. FAQ

Q1: Can I combine three ET112s for a 3-phase system?

No. Use a real 3-phase meter.

Q2: Can I use other meters, for example from other brands?

No.

Q3: I already have a Fronius SmartGrid meter, can I use that?

No.

Q4: What are the differences between the various 3-phase meters?

- EM540 - REL200100100 - Carlo Gavazzi EM540DINAV23XS1X
- ET112 - REL300100000 - Carlo Gavazzi ET112-DIN.AV01.X.S1.X
- ET340 - REL300300000 - Carlo Gavazzi ET340-DIN.AV23.X.S1.X

Differences:

- The ET meters have no display. The only thing they have is an LED, which blinks in case of active communication.
- The ET meters have two RJ45 sockets, but they are not used with the Victron RS485 to USB interface. Note the possible confusion because of yet another RJ45 socket in the Victron world though. Don't mix that with VE.Bus, VE.Can or VE.net. Besides the RJ45 sockets, the meters still also have screw terminals access below the sockets for the RS485 wiring, which is how we advise to connect a meter to the RS485 to USB interface and then a GX device.
- Since there is no display, the modbus address can no longer be changed on the meter. Combining multiple of those meters on one RS485 network is therefore not supported by Victron. You are advised to use multiple RS485 to USB interfaces.

3-phase meter only:

- Measuring energy from single-phase PV Inverter on the second phase of a 3-phase meter actually works.

Q5: Will you keep shipping both 3-phase meters? (ET340 & EM540)

Yes. There are still situations suitable for each. See Q8.

Q6: Can I buy those meters directly from Carlo Gavazzi instead of from you?

Yes. That is also why we make no secret of the CG part numbers.

Q7: I want to use Current Transformers (CTs), is that possible?

Yes. You can buy a CG EM24DINAV53DISX or a CG EM530DINAV53XS1X directly from Carlo Gavazzi or one of their distributors. Even though Victron does not stock that type of meter, we do support it in our software.

Q8: What's the difference between ET340 and EM540 in 3-phase systems?

These meters have a different way of calculating the total of energy imported and exported.

In the ET340, the energy imported and exported is counted at each individual phase and then the Total is provided from the sum of those values.

In the EM540, the energy imported and exported is counted as a total power, with net differential readings from each phase cancelling each other out.

Which Energy Meter is most suitable depends on the measuring configuration in your country. It is most common in Austria and Germany for example to only be billed for the total in a 3-phase system. So it is more accurate to use an EM540 to match the billing.

So if you are exporting from one phase and importing from another phase after the energy meter, but before the billing meter, then you will not be charged for this, and the meter should not count it as an import and an export.

This is also how Victron's phase compensation feature works, to make the most of the cost savings for an ESS system when there is a differential in generation and load across different phases.

Q9: Can I use an isolated USB-RS485 interface?

Yes. The interfaces we sell are non isolated; suitable for most use cases.

In case an isolated one is needed; purchase it directly from Hjelmslund Electronics.

- USB485-STIXL : Isolated USB to RS485 converter

Q10: Can I use Victron Energy Meters instead of a Victron Inverter/Charger to make use of a GX device (e.g. Cerbo GX), VRM and other features?

Energy Meters are intended to supplement a Victron Inverter/Charger in the system. Energy Meters are currently limited in their potential applications. Each Energy Meter is only intended to provide a specific piece of additional information - total loads on AC input and grid import/export, or AC PV inverter and AC generator production without network communications.

However, it is perfectly possible to initially use just a GX device together with an Energy Meter to determine and record the consumption, for example of houses/buildings, heating systems with heat pumps, ventilating and air conditioning or production facilities. Afterwards, the collected data can be evaluated and a decision can be made about the dimensioning of the required Victron inverter/charger(s), the solar system and the type, size and number of batteries.

With GX device firmware version 2.80 and later, they can also be used for other purposes e.g. to measure specific, arbitrary AC loads or circuits for example. But this should not be considered a replacement to having a Victron Inverter/Charger. Attempting to use other brand battery inverters and trying to substitute their lack of data connectivity to the GX device by using Energy Meters will not work as expected.