BatteryProtect 12/24V 65A/100A/220A

With 7-segment LED display: easy to set up

www.victronenergy.com



BatteryProtect BP-65



BatteryProtect BP-100



BatteryProtect BP-220



Connector with preassembled DC minus cable (included)

The BatteryProtect disconnects the battery from non essential loads before it is completely discharged (which would damage the battery) or before it has insufficient power left to crank the engine.

12/24V auto ranging

The BatteryProtect automatically detects system voltage

Programming made easy

The BatteryProtect can be set to engage / disengage at several different voltages.
The seven segment display will indicate which setting has been chosen.

A special setting for Li-ion batteries

In this mode the BatteryProtect can be controlled by the VE.Bus BMS.
Note: the BatteryProtect can also be used as a charge interrupter in between a battery charger and a Li-ion battery. See connection diagram in the manual.

Ultra low current consumption

This is important in case of Li-ion batteries, especially after low voltage shutdown.
Please see our Li-ion battery datasheet and the VE.Bus BMS manual for more information.

Over voltage protection

To prevent damage to sensitive loads due to over voltage, the load is disconnected whenever the DC voltage exceeds 16V respectively 32V.

Ignition proof

No relays but MOSFET switches, and therefore no sparks.

Delayed alarm output

The alarm output is activated if the battery voltage drops below the preset disconnect level during more than 12 seconds. Starting the engine will therefore not activate the alarm. The alarm output is a short circuit proof open collector output to the negative (minus) rail, max. current 50 mA. The alarm output is typically used to activate a buzzer, LED or relay.

Delayed load disconnect and delayed reconnect

The load will be disconnected 90 seconds after the alarm has been activated. If the battery voltage increases again to the connect threshold within this time period (after the engine has been started for example), the load will not be disconnected.
The load will be reconnected 30 seconds after the battery voltage has increased to more than the preset reconnect voltage.

BatteryProtect	BP-65	BP-100	BP-220
Max. continuous load current*	65A	100A	220A
Peak current (during 30 seconds)	250A	600A	600A
Operating voltage range	6 –35V		
Current consumption	When on: 1,5 mA When off or low voltage shutdown: 0,6 mA		
Alarm output delay	12 seconds		
Maximum load on alarm output	50 mA (short circuit proof)		
Load disconnect delay	90 seconds (immediate if triggered by the VE.Bus BMS)		
Load reconnect delay	30 seconds		
Default thresholds	Disengage: 10,5V or 21V Engage: 12V or 24V		
Operating temperature range	Full load: -40°C to +40°C (up to 60% of nominal load at 50°C)		
IP rating	Electronics: IP67 (potted) Connections: IP00		
Connection	M6	M8	M8
Mounting Torque	5 Nm	9 Nm	9 Nm
Weight	0,2 kg 0.5 lbs	0,5 kg 0.6 lbs	0,8 kg 1.8 lbs
Dimensions (hxwxd)	40 x 48 x 106 mm 1.6 x 1.9 x 4.2 inch	59 x 42 x 115 mm 2.4 x 1.7 x 4.6 inch	62 x 123 x 120 mm 2.5 x 4.9 x 4.8 inch

* The BatteryProtect is not designed for reverse currents from charging sources

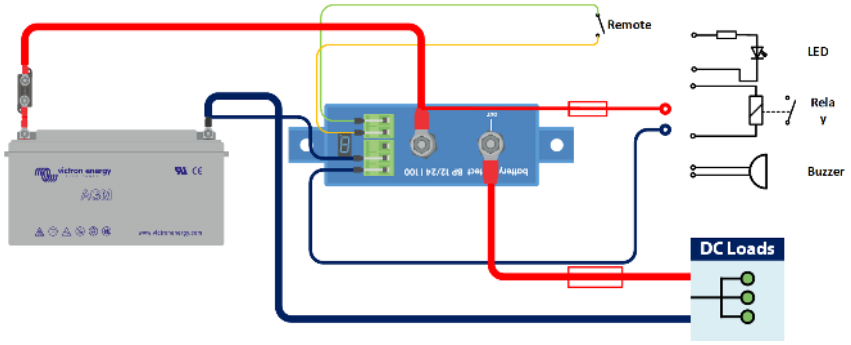

Victron Energy B.V. | De Paal 35 | 1351 JG Almere | The Netherlands
E-mail: sales@victronenergy.com | **www.victronenergy.com**