Smart BatteryProtect 12/24 V 65 A/100 A/220 A

Bluetooth enabled System on-off switch

www.victronenergy.com



Smart BatteryProtect BP-65



Smart BatteryProtect BP-100



Smart BatteryProtect BP-220



Connector with preassembled DC minus cable (included)

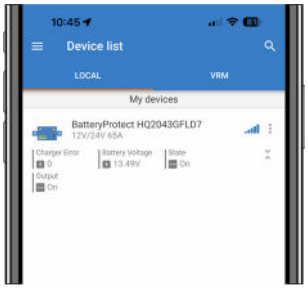

Instant Readout via VictronConnect

Protects the battery against excessive discharge and can be used as a system on/off switch

The Smart BatteryProtect disconnects the battery from non-essential loads before it is completely discharged (which would damage the battery) or before it has insufficient power left to crank the engine.
The on/off input can be used as a system on/off switch.

12/24 V auto ranging

The Smart BatteryProtect automatically detects system voltage one time only.

Bluetooth: programming made easy

When using Bluetooth to program the Smart BatteryProtect any required engage/disengage levels can be set.
Alternatively, one of nine predefined engage/disengage levels can be set with the programming pin (see manual).
If required, Bluetooth can be disabled.

Instant Readout

VictronConnect can display the most important data of the Smart BatteryProtect on the Device List page without the need to pair with the product. This includes visual notifications of warnings, alarms, and errors that enable diagnostics at a glance.

A special setting for Li-ion batteries

In this mode the BatteryProtect can be controlled by the VE.Bus BMS.
Note: the BatteryProtect can also be used as a charge interrupter in between a battery charger and a Li-ion battery. See connection diagram in the manual.

Ultra-low current consumption

This is important in case of Li-ion batteries, especially after low voltage shutdown.
Please see our Li-ion battery datasheet and the VE.Bus BMS manual for more information.

Over voltage protection

To prevent damage to sensitive loads due to over voltage, the load is disconnected whenever the DC voltage exceeds 16.3V respectively 32.6V.

Ignition proof

No relays but MOSFET switches, and therefore no sparks.

Delayed alarm output

The alarm output is activated if the battery voltage drops below the preset disconnect level during more than 12 seconds. Starting the engine will therefore not activate the alarm. The alarm output is a short circuit proof open collector output to the negative (minus) rail, max. current 50 mA. The alarm output is typically used to activate a buzzer, LED or relay.

Delayed load disconnect and delayed reconnect

The load will be disconnected 90 seconds after the battery voltage drops below the preset level. If the battery voltage increases again to the connect threshold within this time period (after the engine has been started for example), the load will not be disconnected.
The load will be reconnected 30 seconds after the battery voltage has increased to more than the preset reconnect voltage.

Smart BatteryProtect		Smart BP-65	Smart BP-100	Smart BP-220
Maximum continuous load current*		65 A	100 A	220 A
Peak current (during 30 seconds)		250 A	600 A	600 A
Operating voltage range		6 –35 V		
Current consumption	BLE On	When on: 1,4 mA When off or low voltage shutdown: 0,9 mA		
	BLE Off	When on: 1,2 mA When off or low voltage shutdown: 0,7 mA		
Alarm output delay		12 seconds		
Maximum load on alarm output		50 mA (short circuit proof)		
Load disconnect delay		90 seconds (immediate if triggered by the VE.Bus BMS)		
Load reconnect delay		30 seconds		
Default thresholds		Disengage: 10,5 V or 21 V Engage: 12 V or 24 V		
Operating temperature range		Full load: -40°C to +40°C (up to 60% of nominal load at 50°C)		
IP rating		Electronics: IP67 (potted) Connections: IP00		
Connection		M6	M8	M8
Mounting Torque		5 Nm	9 Nm	9 Nm
Weight		0,2 kg 0.5 lbs	0,5 kg 0.6 lbs	0,8 kg 1.8 lbs
Dimensions (hxwxd)		48 x 55 x 106 mm 1.9 x 2.2 x 4.2 inch	61 x 41 x 164 mm 2.4 x 1.6 x 6.5 inch	60 x 123 x 121 mm 2.4 x 4.8 x 4.8 inch

* The BatteryProtect is not designed for reverse currents from charging sources

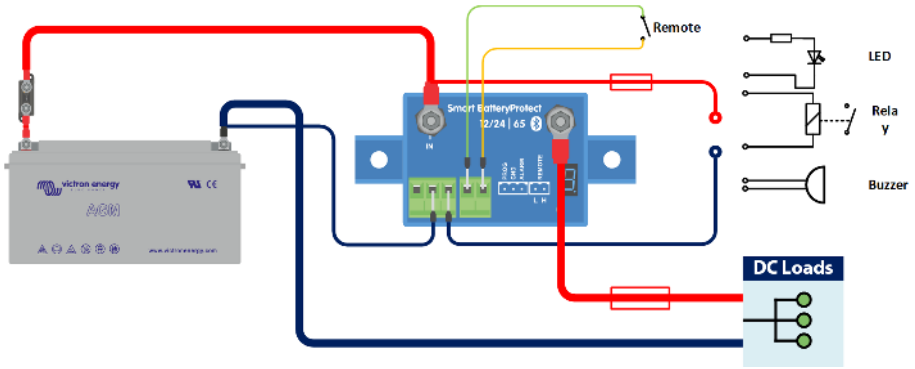

Victron Energy B.V. | De Paal 35 | 1351 JG Almere | The Netherlands
E-mail: sales@victronenergy.com | **www.victronenergy.com**