SmartShunt 300 A / 500 A / 1000 A / 2000 A

www.victronenergy.com



SmartShunt 300 A



SmartShunt 500 A



SmartShunt 1000 A



SmartShunt 2000 A



The SmartShunt is an all-in-one battery monitor, only without a display. Your phone acts as the display.

The SmartShunt connects via Bluetooth to the VictronConnect app on your phone (or tablet) and you can conveniently read out all monitored battery parameters, like state of charge, time to go, historical information and much more.

Alternatively, the SmartShunt can be connected and be read by a GX device. Connection to the SmartShunt is made via a VE.Direct cable.

The SmartShunt is a good alternative for a BMV battery monitor, especially for systems where battery monitoring is needed but less wiring and clutter is wanted.

The SmartShunt is equipped with Bluetooth, a VE.Direct port and a connection that can be used to monitor a second battery, for midpoint monitoring, or to connect a temperature sensor.

Differences compared to BMV-712 Battery Monitor

- No programmable visual and audible alarm.
- No programmable relay.

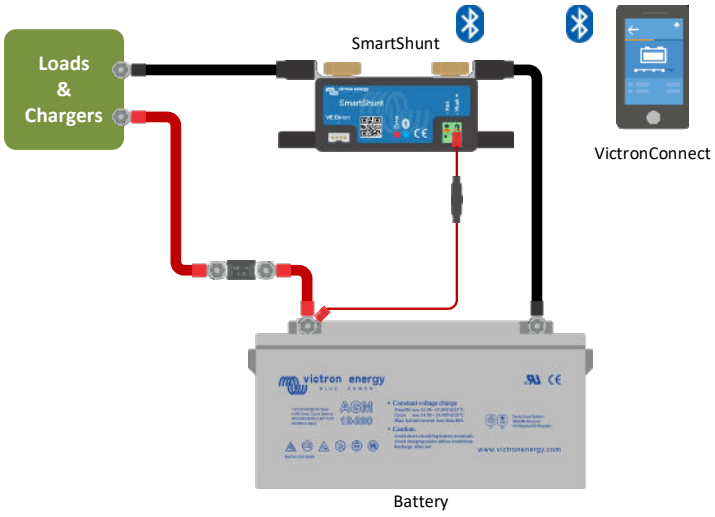

Basic SmartShunt wiring

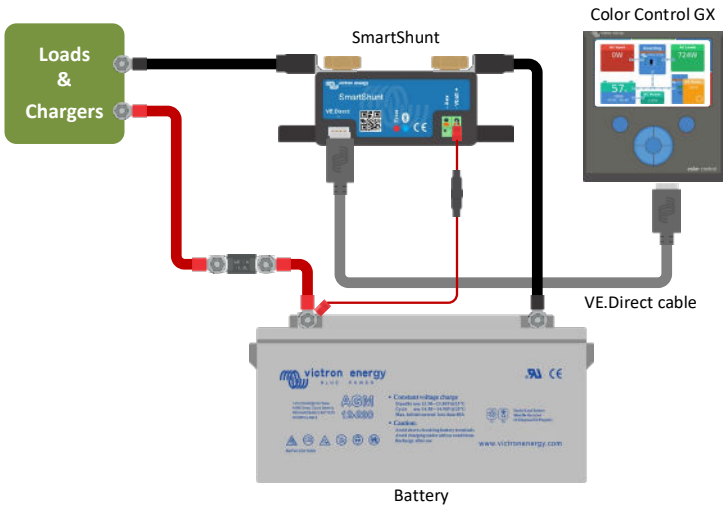

Connecting a SmartShunt to a GX device

Victron Energy B.V. | De Paal 35 | 1351 JG Almere | The Netherlands
E-mail: sales@victronenergy.com | **www.victronenergy.com**

SmartShunt	300 A / 500 A / 1000 A / 2000 A
Supply voltage range	6.5 - 70 VDC
Current draw	< 1mA
Input voltage range, auxiliary battery	6.5 - 70 VDC
Battery capacity (Ah)	1 - 9999 Ah
Operating temperature range	-40 +50°C (-40 - 120°F)
Measures voltage of second battery, or temperature, or midpoint	Yes
Temperature measurement range	-20 +50°C
VE.Direct communication port	Yes
RESOLUTION & ACCURACY	
Current	± 0.01 A
Voltage	± 0.01 V
Amp hours	± 0.1 Ah
State of charge (0 – 100 %)	± 0.1 %
Time to go	± 1 min
Temperature (if optional temperature sensor connected)	± 1 °C/°F (0 – 50 °C or 30 – 120 °F)
Accuracy of current measurement	± 0.4 %
Offset	Less than 10 / 10 / 20 / 40 mA
Accuracy of voltage measurement	± 0.3 %
INSTALLATION & DIMENSIONS	
Dimensions (h x w x d)	300 A: 44 x 120 x 44 mm 500 A: 46 x 120 x 54 mm 1000 A: 68 x 168 x 75 mm 2000 A: 68 x 168 x 100 mm
Shunt connection bolts	300 A: M8 500 A, 1000 A, 2000 A: M10 (0.3937 inch)
Protection category	IP21
STANDARDS	
Safety	EN 60335-1
Emission / Immunity	EN-IEC 61000-6-1 EN-IEC 61000-6-2 EN-IEC 61000-6-3
Automotive	EN 50498
ACCESSORIES	
Cables (included)	Two cables with 1 A fuse, for '+' connection and starter battery or midpoint connection
Temperature sensor	Optional (ASS000100000)
A note regarding the range of the Bluetooth signal	The shunt and the electric cables do negatively influence the range of the Bluetooth signal. The resulting range of 10-15 meter is however satisfactory in most cases. The proximity of other electrically conducting elements, such as the metal chassis of a vehicle or seawater around the hull if a boat, may reduce the range of the Bluetooth signal to an unacceptable level. The solution in such a case is to add a VE.Direct Bluetooth Dongle (ASS030536011) to the system, and to switch off Bluetooth in the SmartShunt.
STORED TRENDS	
Data stored	Battery voltage, Current, State of Charge % as well as the Aux input (Battery temperature, or midpoint deviation, or starter battery voltage).
Number of days trends data is stored	46

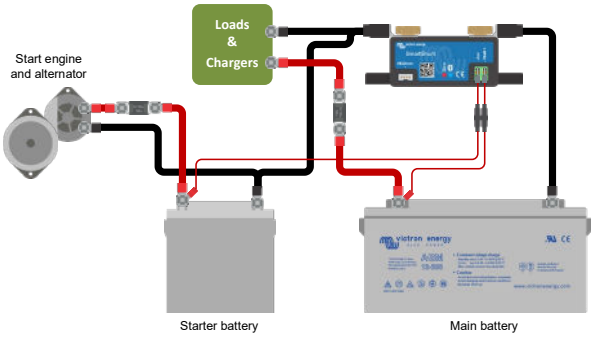

Measuring voltage of the starter battery

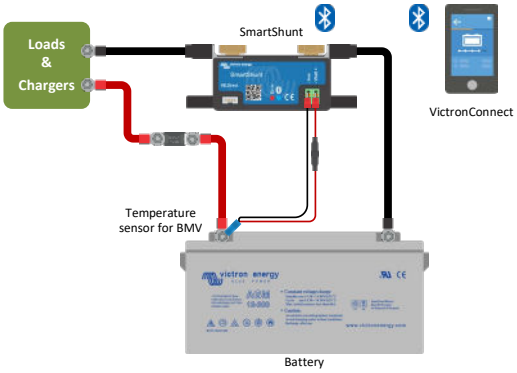

Measuring battery temperature

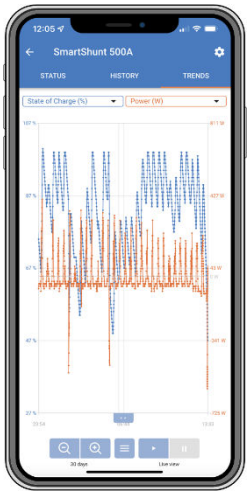

Stored trends for SmartShunt

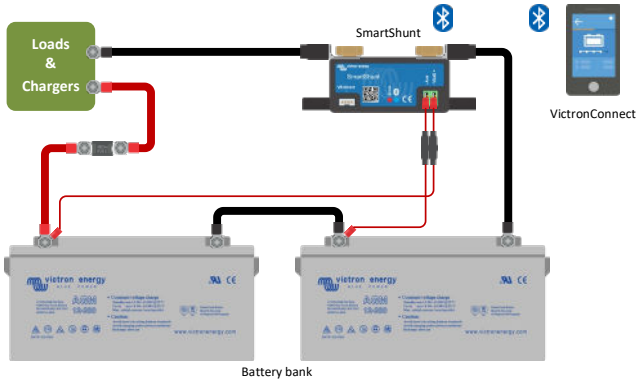

Measuring battery bank midpoint

Victron Energy B.V. | De Paal 35 | 1351 JG Almere | The Netherlands
E-mail: sales@victronenergy.com | **www.victronenergy.com**